THIS DOCUMENT CONTAINS CONFIDENTIAL INFORMATION THAT IS JMC DESIGN INC PROPERTY.
DO NOT DISCLOSE TO OR DUPLICATE FOR OTHERS EXCEPT AS AUTHORIZED BY PROTOS.

REVISIONS

REV.	DESCRIPTION	ENGINEER	APPROVED	DATE
1	ORIGINAL RELEASE	Satrio N	Satrio N	11/22/06

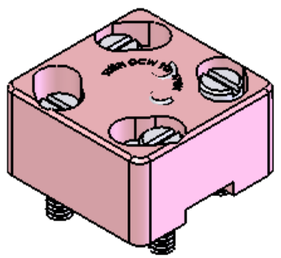

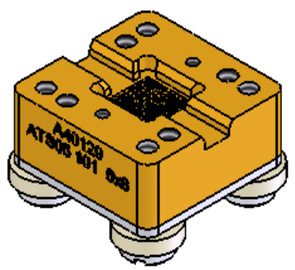

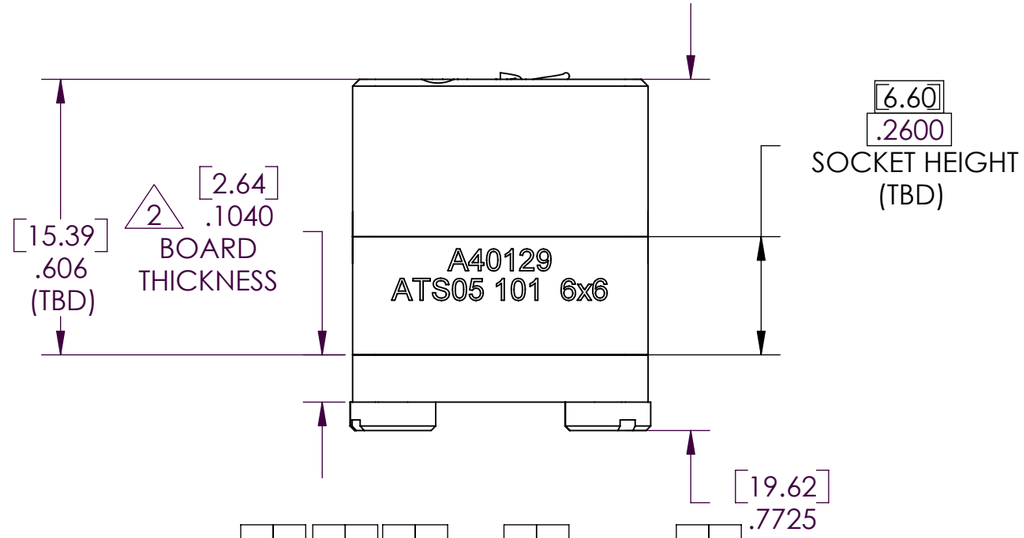

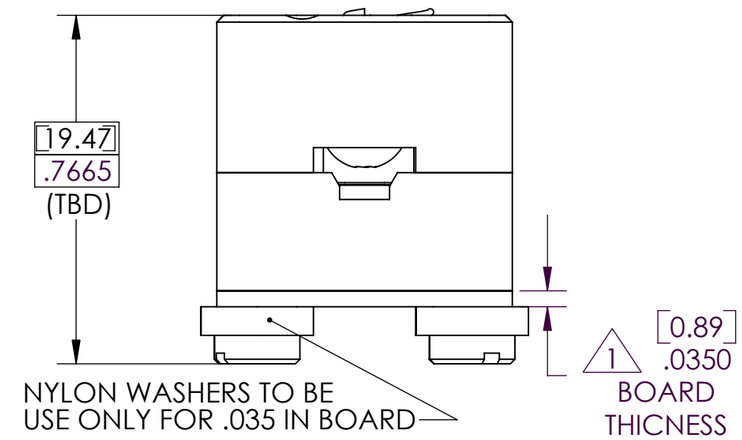

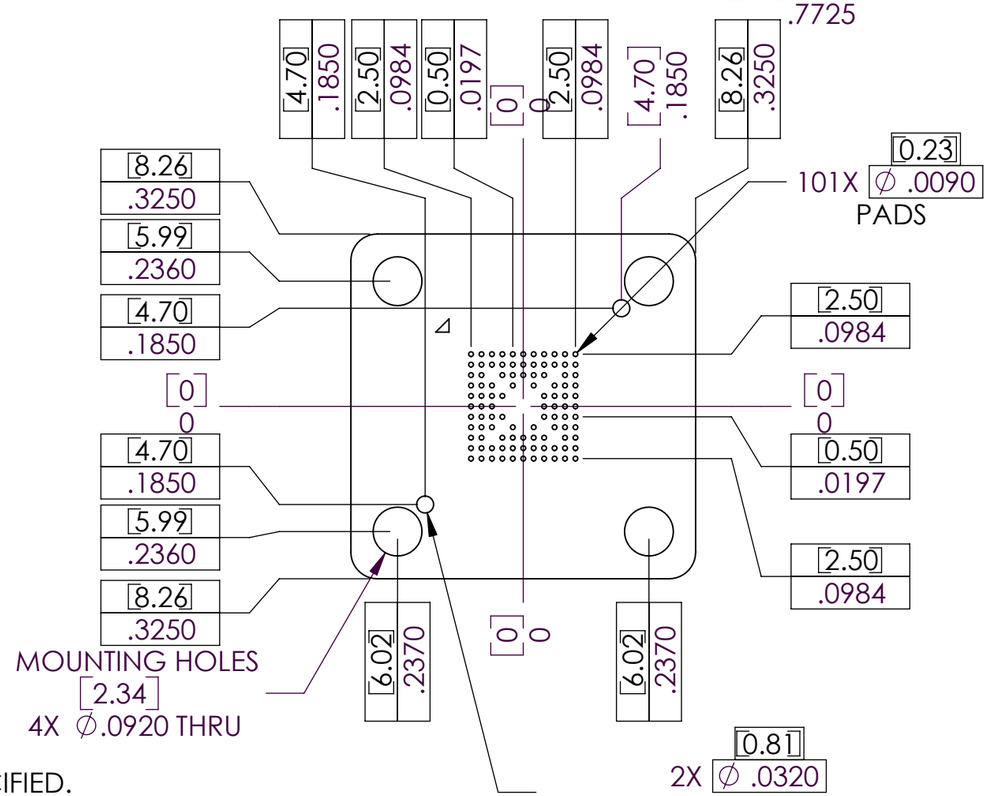

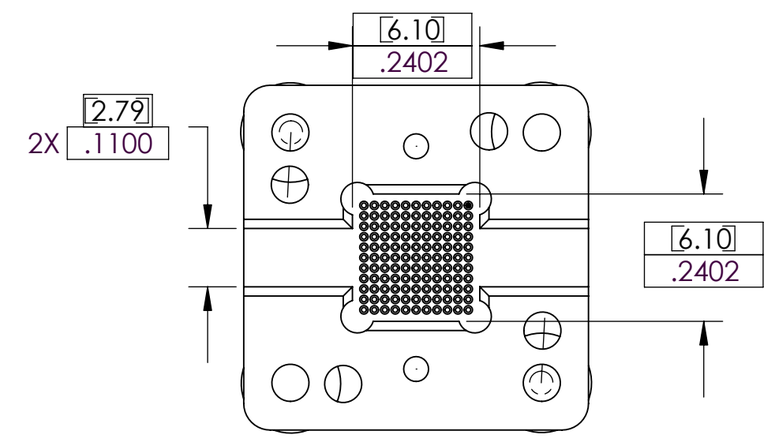

SOCKET TOP VIEW

NOTES: UNLESS OTHERWISE SPECIFIED.

1 NYLON WASHERS REQUIRED TO USE THIS BOARD THICKNESS.

2 NO WASHERS REQUIRED FOR THIS BOARD THICKNESS.

FOOTPRINT

THIRD ANGLE PROJECTION

INCHES

TOLERANCES UNLESS OTHERWISE SPECIFIED.
FRACTIONS ± 1/32 | DECIMALS .XX ± .005, .XXX ± .002, .XXXX ± .001 | ANGLES D. ± 1°, .D ± .5°
32

MATERIAL

FINISH

SCALE: 2:1

PROTOS ELECTRONICS

PROJECT DESCRIPTION: ATS05-101-6X6-0.5-235-01A

DRAWING NO. / NAME: A40129F Assy, Complete, Footprint

DWG SIZE: B | SHEET 1 OF 2 | REV. 1